M3.12 CURB & GUTTER DEPRESSED

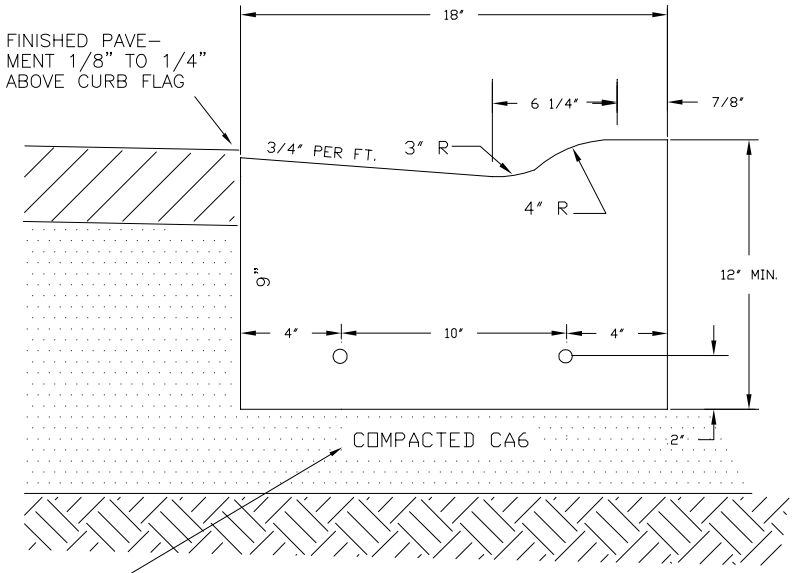

EXTEND PAVEMENT BASE COURSE TO PROVIDE A MINIMUM 6" LAYER OF COMPACTED CA6 UNDER THE CURB.

NO. 5 REBARS, 10' LONG CENTERED OVER UTILITY TRENCHES AND 2 NO. 5 DOWEL BARS AT EXPANSION JOINTS EVERY 60'.
SAW CONSTRUCTION JOINTS EVERY 15', 3" DEPTH

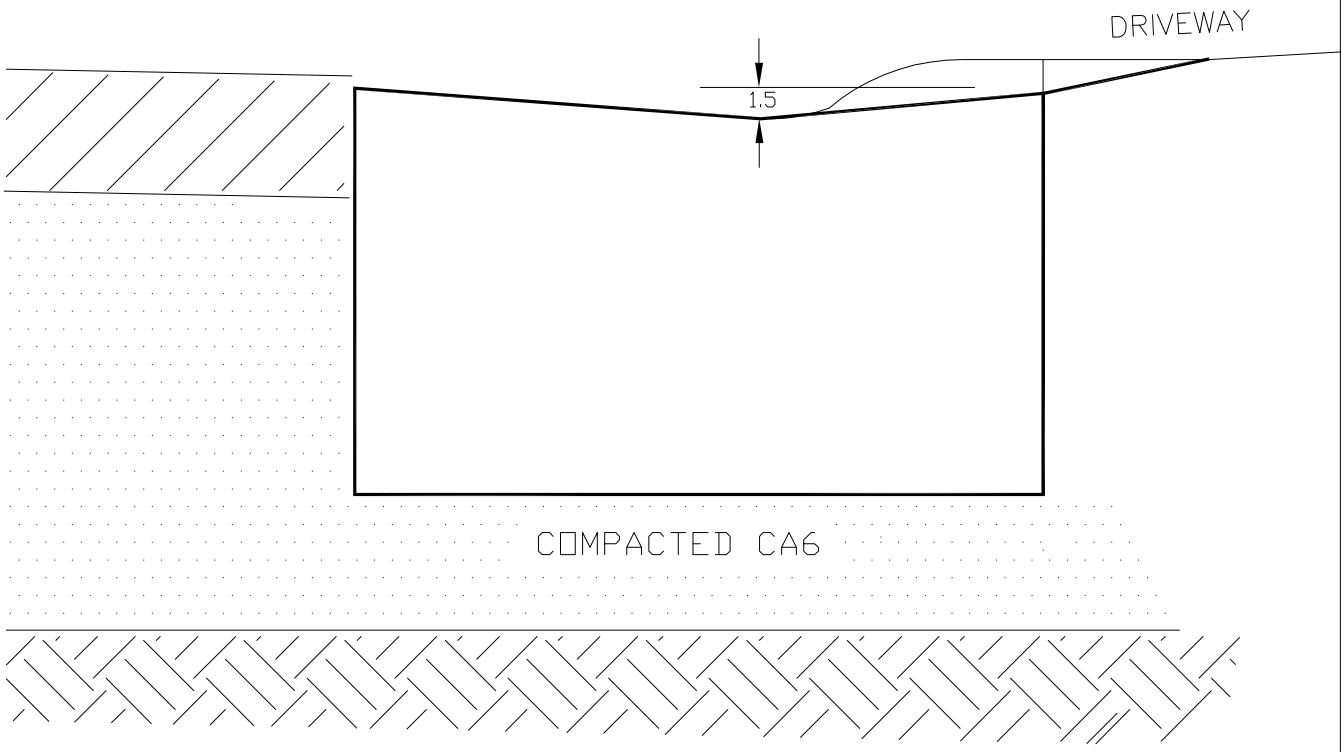

DEPRESSED M3.12 CURB & GUTTER AT DRIVEWAY

Z:\acaddata\dwg\Standard details\Std Curb M312 Depressed.dwg